WE are convinced that readers of "Mill Supplies" are interested in quality in all things. We expect through this and future advertisements to interest all progressive manufacturers and the dealers who supply the progressive manufacturers in the

Union Caliper Company Line of Machinists' Tools

On May 1, 1911, we purchased from the Hill-Standard Co., Anderson, Ind., its Lathe and Planer Tool Holder business, known to the trade as the "Hill Tools." We have improved the line in every possible way, and without a doubt they rank A1 among machinists' tools. A few selections from our catalog are shown in this advertisement. Others will appear later.

Our New Catalog will come from the printer Sept. 1st. Every dealer and manufacturer is requested to send for a copy, so as to have on file the complete list and descriptions of the "Union Caliper" Line.

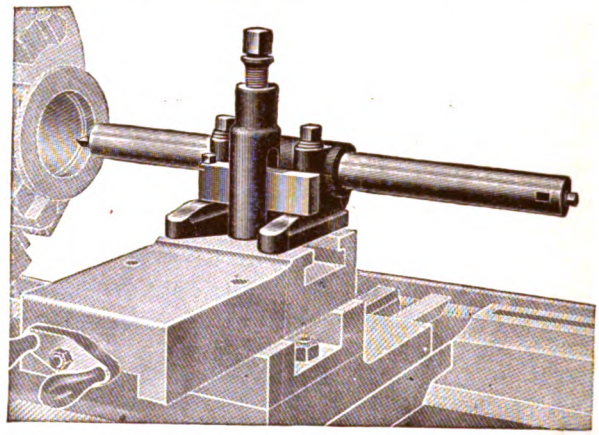

The Hill Boring Tool can't be beat. It's a simple matter to attach it to the lathe, and after being attached, it is as solid as if it were a part of the lathe itself. In boring, it can be used close up to the side of the cross slide, thereby eliminating over-hang which causes chatter. The bar is solid and held rigid in the malleable casting by two powerful collar screws. We guarantee that the bar will not turn or slip under the heaviest cuts. **Note this feature.** This tool may be reversed from its boring position and used as a tool for turning on the outside of a piece, that is, the largest diameter the lathe will swing.

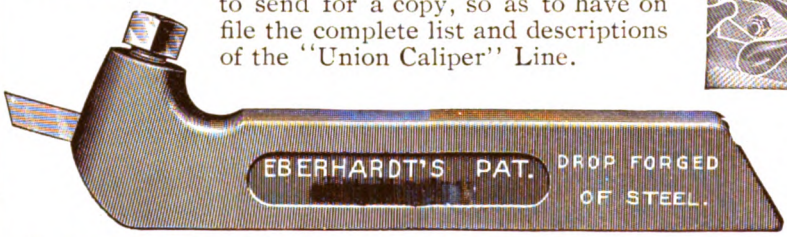

"Eberhardt" Turning Tools are in every way superior to any tools of their kind. They are solid, substantial, heat treated bodies, equipped with an extra fine high speed steel for cutters and large tool steel, hard point set screws. The heads of these tools are enlarged furnishing strength exactly where needed.

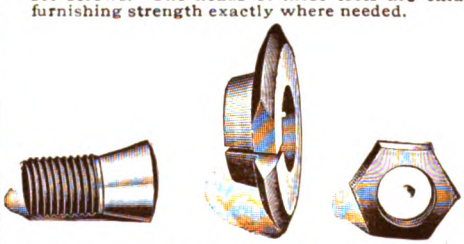

Detailed cut showing the parts of the Hill Threading Tool.

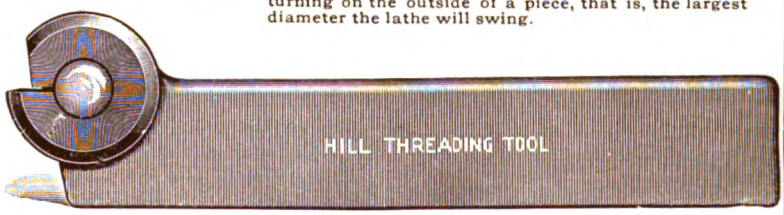

Hill Threading Tool. The cutter in this tool will be found to be always the right shape, without any dressing on the part of the mechanic. This saves time. To resharpen it is necessary to grind only the face of the cutter. Cutters will not slip and there is ample clearance at all times. See detailed cut opposite.

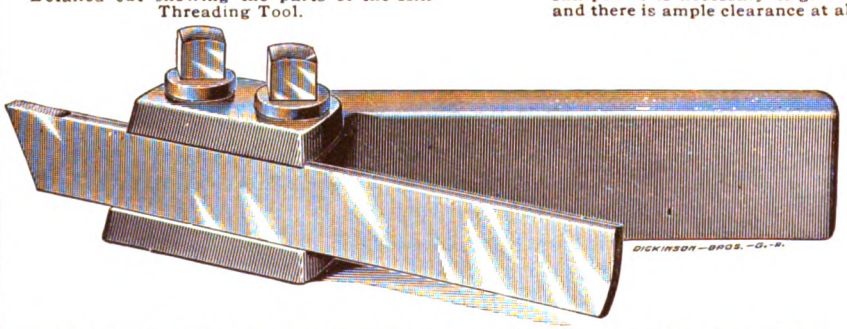

Hill Cutting Off Tool. The blade is so held in the hardened holder and the construction of the tool is such that the blade is held perfectly perpendicular with the base of the tool, insuring a clearance to the blade. Blade is bevelled thinner at the bottom than at the top, also tapers from the point to the rear, giving a clearance in two ways, which we firmly believe to be the only true principle in a cutting off instrument. This tool is rigid and solid, and works without chatter.

Every "Union Caliper" Tool is warranted to give satisfaction for the purpose for which it is intended.

Union Caliper Company, Orange, Mass.

"Machinists' Tools of Quality"

Calipers	Nail Sets	Planer Tool Holders	Machine Vises	Dividers	Center Punches
Lathe Dogs	Thread Gauges	Tap Wrenches	Lathe Tool Holders	Drill Vises	Drill Holders

Digitized by Google